Student Name: _____

Student ID# _____

	Check which tutorial for pick-up
T02 Monday mornings in BSB	
T03 Wednesday afternoons in ITB	
T01 Friday mornings in IWC	

CHEMICAL ENGINEERING 2O04
Midterm #2

Duration 120 minutes (7:00pm – 9:00pm) **D.R. Latulippe**
McMaster University Term Test **Tuesday March 28th, 2023**

SPECIAL INSTRUCTIONS

1. The test includes 4 questions and 1 bonus question; ensure your copy of the test is complete.
2. Marks for each problem are given (**Total of 42 marks)**. Use this as a time-management guide; for example: $2\ marks\left(\frac{120\ minutes}{42\ marks}\right) \sim 5\ minutes$
3. The following materials are permitted during this examination:
   a) The Fox and McDonald's Introduction to Fluid Mechanics textbook (any edition and any version)
   b) Any printed notes or hand-written notes
   c) A tablet or computer in "airplane mode" with a document reader (e.g. Adobe Acrobat, Microsoft OneNote) open to review course material. **<u>Any student caught with a device not in airplane mode and/or with other applications opened will automatically receive a grade of 0 on the test.</u>**
   d) The McMaster Standard Calculator (Casio FX-991MS/MS+)
4. **The following materials are NOT permitted during this examination:**
   a) The internet.
   b) Any software to help with calculations (e.g. Excel, MATLAB)
   c) Any applications to communicate with anyone.
5. Only tests written in pen will be considered if re-marking is requested (addition errors excepted).
6. On pages 11 & 12, there are some useful figures & tables.

For grading purposes only

Question 1	
Question 2	
Question 3	
Question 4	
Bonus	
TOTAL	

QUESTION 1 (9 MARKS)

Air (at 20 °C and atmospheric pressure) is flowing through a horizontal rectangular duct (dimensions given in accompanying figure) made of commercial steel. Determine the volumetric flow rate (m^3/s) of air given that the pressure differential (i.e. $P_1 - P_2$) for a 50 m length of straight duct is 218 Pa.

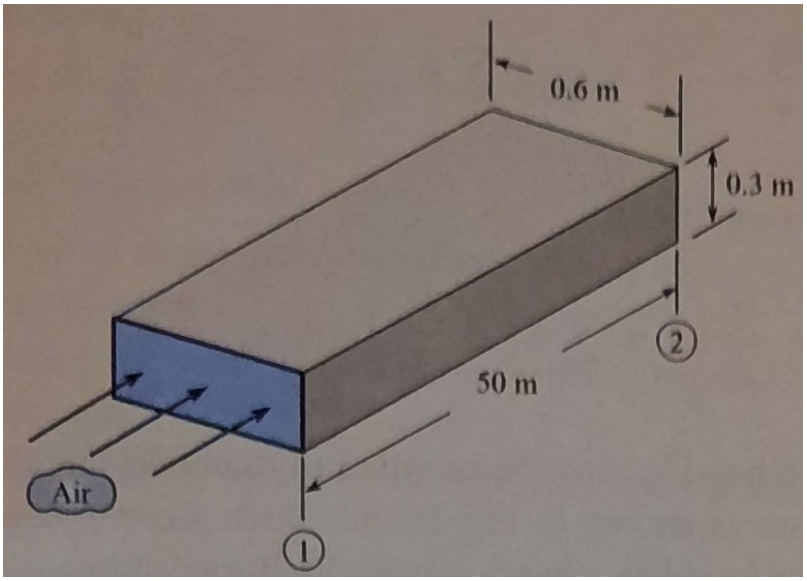

QUESTION 2 (10 MARKS)

Glycerin at 20 °C, a *very* viscous fluid (1.4 Pa·s), is being transported to a membrane production line through the piping system shown in the figure below (not drawn to scale) with the following details:

- All the piping is 4" schedule 40 made of stainless steel
- Both elbows are 90° threaded regular (K = 1.4)
- The hand operated globe valve (on lower portion of piping) is fully open (K = 10)

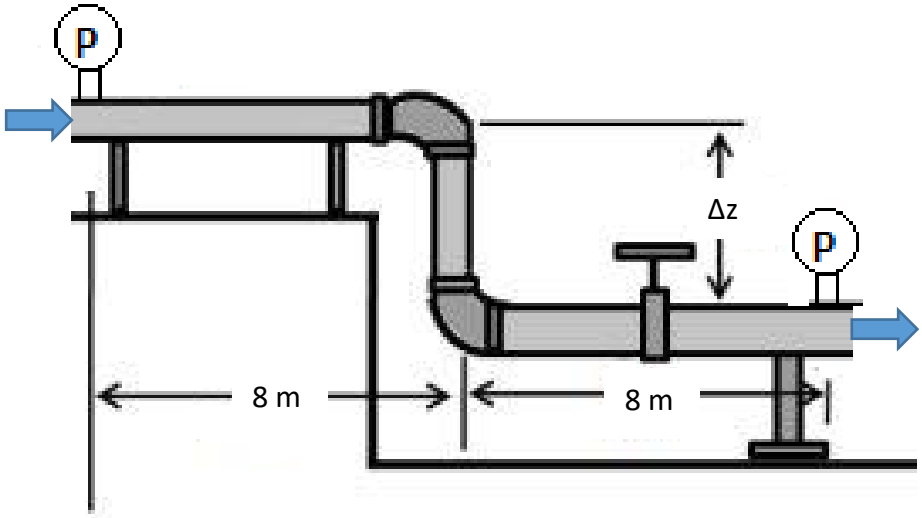

a) Write the simplified form of the Bernoulli equation that describes the transport of glycerin from the pressure gauge on the upper portion of piping down to the pressure gauge on the lower portion of piping.
(3 marks)

b) Determine the elevation change (m) between the upper and lower portions of the piping system (which is indicated on the figure as Δz) given that the differential pressure between the first pressure gauge and the second pressure gauge (i.e. $P_1 - P_2$) is 1500 kPa when the volumetric flow rate of glycerin is 80 L/s.
(7 marks)

QUESTION 3 (12 MARKS)

As shown in the figure below, a pump is being used to transfer 5 °C water from an underground well (in which the water level is constant due to it being continuously replenished by water flowing in from surrounding water table) to an open-top reservoir.

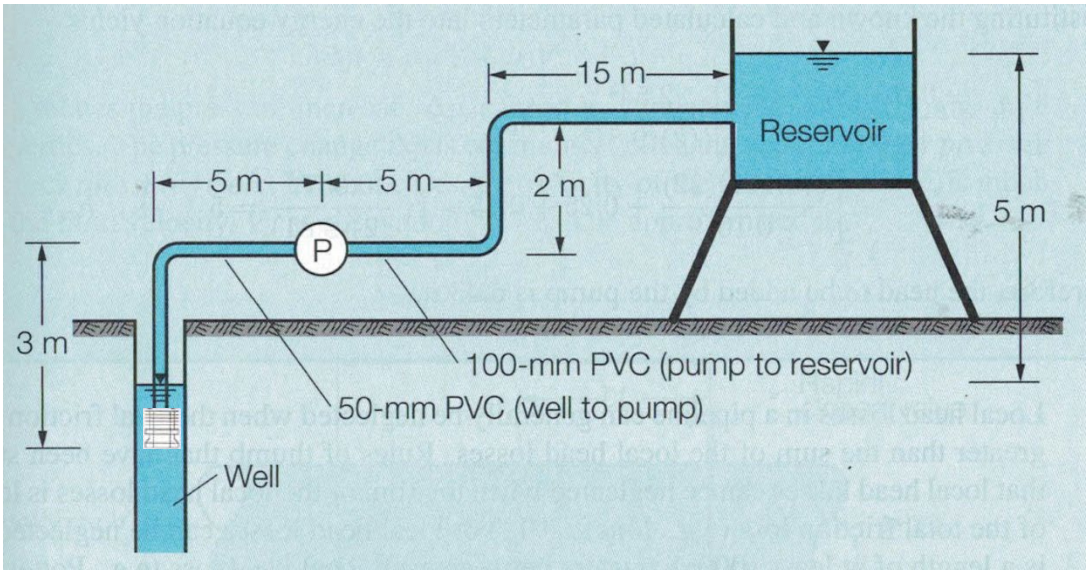

a) Write the simplified form of the Bernoulli equation that describes the transport of water from the underground well to the open-top reservoir.
(3 marks)

b) Determine the amount of head (m) that must be supplied by the pump (i.e. H_{pump}) to achieve a volumetric flow rate of water equal to 0.004 m^3/s given the following details:
- All the piping is PVC (essentially same as "smooth pipe"); *the dimensions given on the figure are the actual internal diameters*
- There is a basket strainer (K = 1.3) on the inlet of the suction line
- All the elbows are 90° glued regular (K = 0.31)

(9 marks)

QUESTION 4 (11 MARKS)

You are asked to select a new centrifugal pump for the system shown to the right that was designed to deliver 0.03 m^3/s of 60 °C water from the storage tank into the reactor. The entire piping system is constructed from 10 cm internal diameter, wrought iron pipe. A globe valve is located between the pump outlet and reactor inlet. The storage tank and reactor are both closed vessels but they are vented to maintain atmospheric pressure above the liquid level.

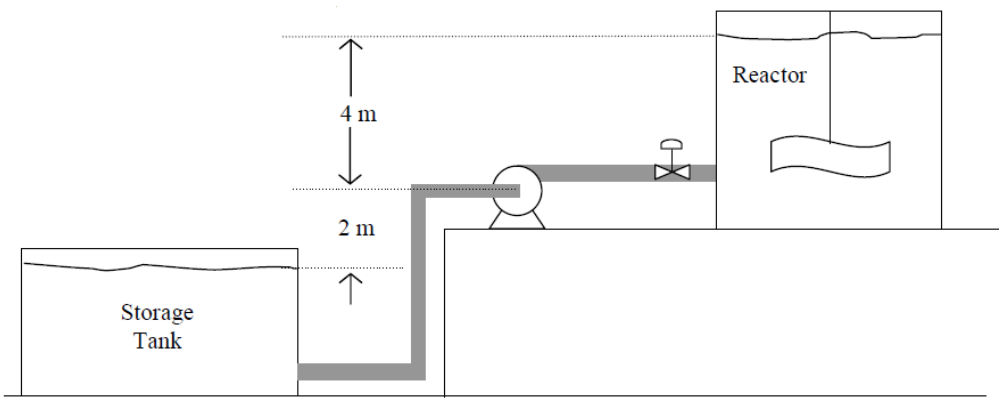

a) Calculate the Net Positive Suction Head available (m). Note that previous experiments showed that the total head loss for the piping section between the storage tank and the pump, H_{l_T} , has been determined to be a function of the average velocity, V_{avg}, as follows: $H_{l_T} = 0.3 \cdot {V_{avg}}^2$, where H_{l_T} is in m and V_{avg} is in m/s.

(4 marks)

b) A local equipment supplier sends you the simplified pump performance curve shown below.

Using the information in the performance curve and the result from part a), what can you conclude about the suitability of using the supplier recommended pump in the system?
(2 marks)

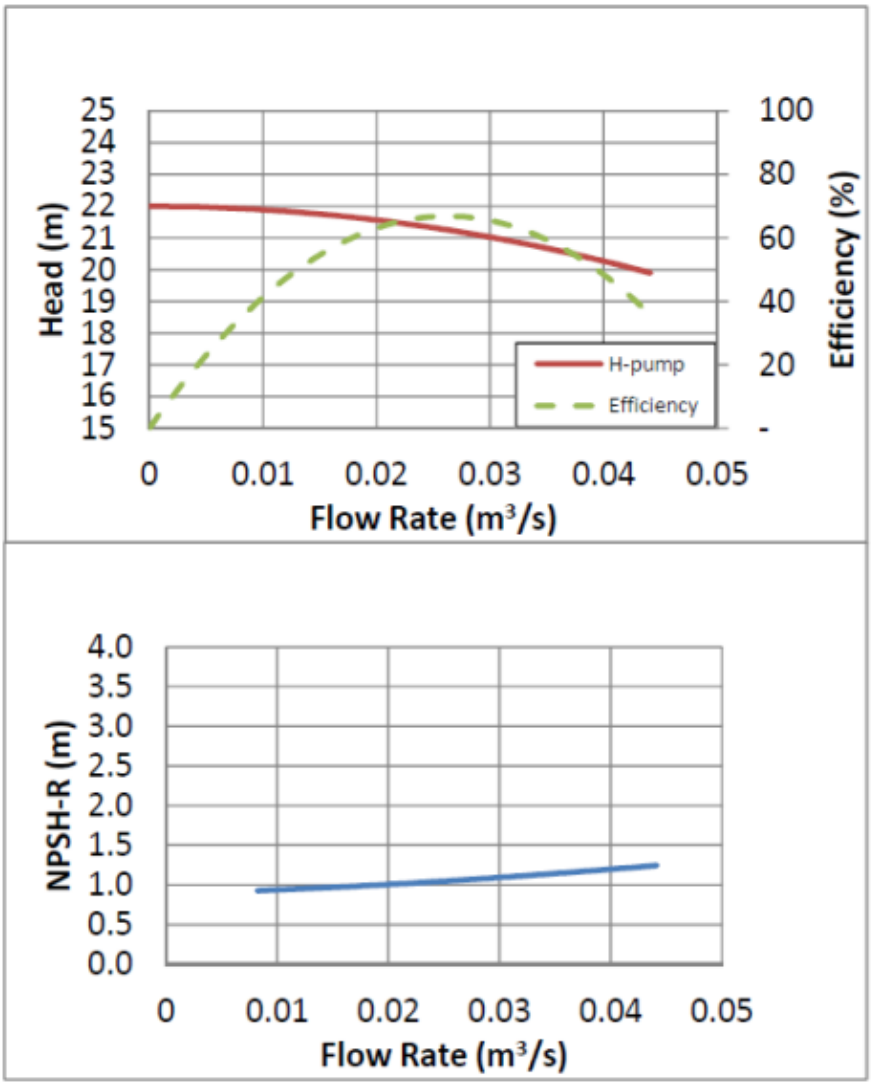

c) If the globe valve between the pump and the reactor will be automatically adjusted such that the system operating point is at the desired flow rate (i.e. 0.03 m^3/s), calculate the hydraulic power (kW), also known as the rate of mechanical energy input to the fluid, of the pump.

(3 marks)

d) Finally, calculate the mechanical input power (kW) needed to drive the pump

(2 marks)

BONUS QUESTION (3 MARKS)

Prove that for the scenario of fluid flowing in the annular space between two concentric cylinders (as shown in the diagram below) that the hydraulic diameter (Dh) is equal to the difference in the diameters of the outer and inner cylinders (i.e. Do-Di).

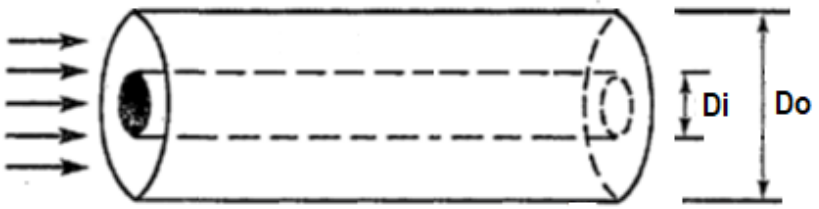

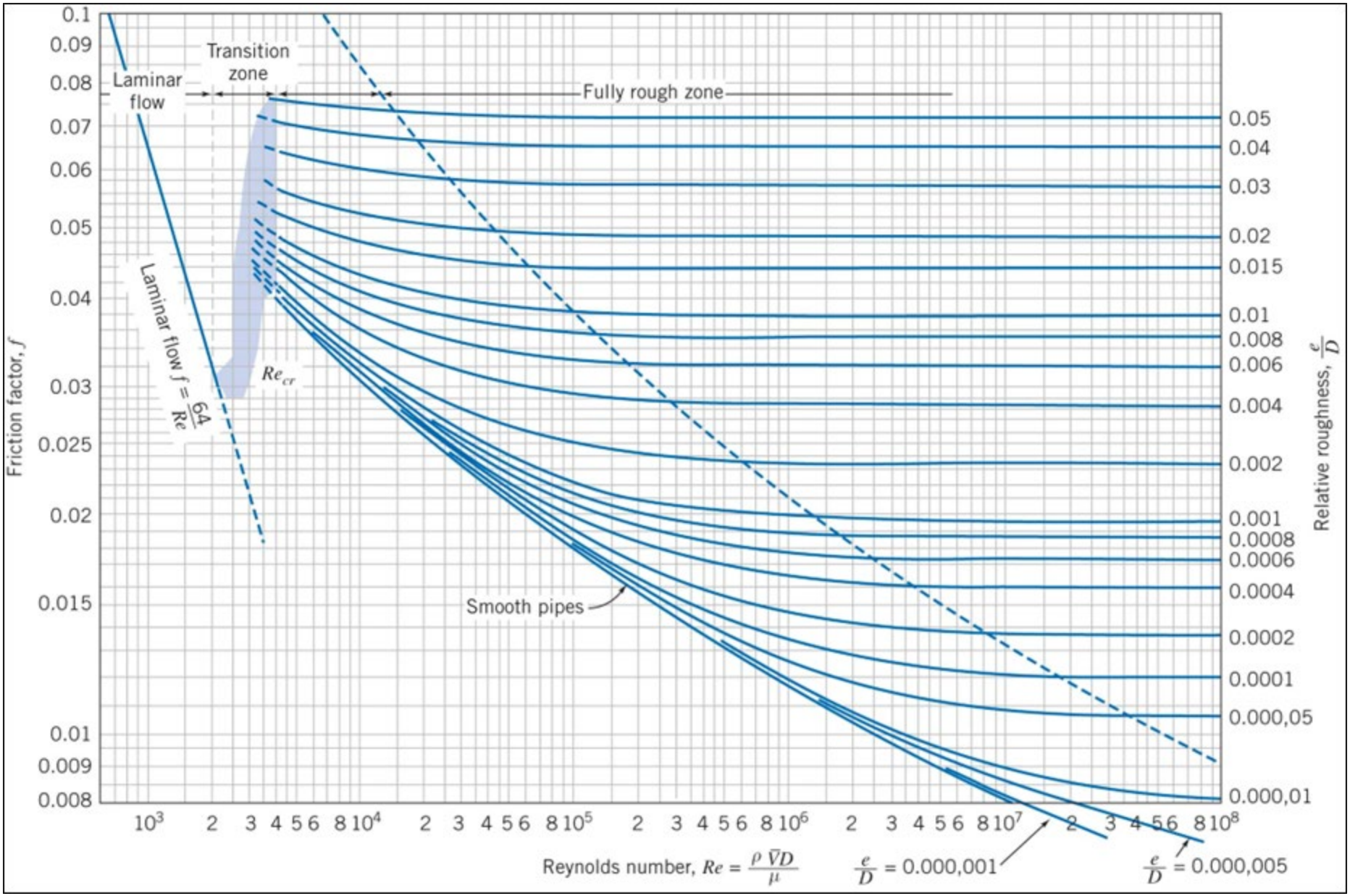
Laminar flow
Transition zone
Fully rough zone
Laminar flow $f = \frac{64}{Re}$
Re_{cr}
Smooth pipes
Friction factor, f
Relative roughness, $\frac{e}{D}$
Reynolds number, $Re = \frac{\rho \bar{V} D}{\mu}$
$\frac{e}{D}$ = 0.000,001
$\frac{e}{D}$ = 0.000,005
0.1
0.09
0.08
0.07
0.06
0.05
0.04
0.03
0.025
0.02
0.015
0.01
0.009
0.008
10^3 2 3 4 5 6 8 10^4 2 3 4 5 6 8 10^5 2 3 4 5 6 8 10^6 2 3 4 5 6 8 10^7 2 3 4 5 6 8 10^8
0.05
0.04
0.03
0.02
0.015
0.01
0.008
0.006
0.004
0.002
0.001
0.0008
0.0006
0.0004
0.0002
0.0001
0.000,05
0.000,01

Table A.1

Specific Gravities of Selected Engineering Materials

(a) Common Manometer Liquids at 20°C

Liquid	Specific Gravity
E.V. Hill blue oil	0.797
Meriam red oil	0.827
Benzene	0.879
Dibutyl phthalate	1.04
Monochloronaphthalene	1.20
Carbon tetrachloride	1.595
Bromoethylbenzene (Meriam blue)	1.75
Tetrabromoethane	2.95
Mercury	13.55

Source: Data from References [1–3].

Table A.8

Properties of Water (SI Units)

Temperature, T (°C)	Density, ρ (kg/m^3)	Dynamic Viscosity, μ (N · s/m^2)	Kinematic Viscosity, ν (m^2/s)	Surface Tension, σ (N/m)	Vapor Pressure, p_v (kPa)	Bulk Modulus, E_v (GPa)
0	1000	1.76E-03	1.76E-06	0.0757	0.661	2.01
5	1000	1.51E-03	1.51E-06	0.0749	0.872	
10	1000	1.30E-03	1.30E-06	0.0742	1.23	
15	999	1.14E-03	1.14E-06	0.0735	1.71	
20	998	1.01E-03	1.01E-06	0.0727	2.34	2.21
25	997	8.93E-04	8.96E-07	0.0720	3.17	
30	996	8.00E-04	8.03E-07	0.0712	4.25	
35	994	7.21E-04	7.25E-07	0.0704	5.63	
40	992	6.53E-04	6.59E-07	0.0696	7.38	
45	990	5.95E-04	6.02E-07	0.0688	9.59	
50	988	5.46E-04	5.52E-07	0.0679	12.4	2.29
55	986	5.02E-04	5.09E-07	0.0671	15.8	
60	983	4.64E-04	4.72E-07	0.0662	19.9	
65	980	4.31E-04	4.40E-07	0.0654	25.0	
70	978	4.01E-04	4.10E-07	0.0645	31.2	
75	975	3.75E-04	3.85E-07	0.0636	38.6	
80	972	3.52E-04	3.62E-07	0.0627	47.4	
85	969	3.31E-04	3.41E-07	0.0618	57.8	
90	965	3.12E-04	3.23E-07	0.0608	70.1	2.12
95	962	2.95E-04	3.06E-07	0.0599	84.6	
100	958	2.79E-04	2.92E-07	0.0589	101	

THE END

Table A.2

Physical Properties of Common Liquids at 20°C

Liquid	Isentropic Bulk Modulus[a] (GN/m^2)	Specific Gravity (—)
Benzene	1.48	0.879
Carbon tetrachloride	1.36	1.595
Castor oil	2.11	0.969
Crude oil	—	0.82–0.92
Ethanol	—	0.789
Gasoline	—	0.72
Glycerin	4.59	1.26
Heptane	0.886	0.684
Kerosene	1.43	0.82
Lubricating oil	1.44	0.88
Methanol	—	0.796
Mercury	28.5	13.55
Octane	0.963	0.702
Seawater[b]	2.42	1.025
SAE 10W oil	—	0.92
Water	2.24	0.998

Source: Data from References [1, 5, 6].

[a]Calculated from speed of sound; 1 GN/m^2 = 10^9 N/m^2 (1 N/m^2 = 1.45×10^{-4} lbf/in.^{2}).

[b]Dynamic viscosity of seawater at 20°C is $\mu = 1.08 \times 10^{-3}$ N · s/m^2. (Thus, the kinematic viscosity of seawater is about 5 percent higher than that of freshwater.)

Table A.10

Properties of Air at Atmospheric Pressure (SI Units)

Temperature, T (°C)	Density, ρ (kg/m^3)	Dynamic Viscosity, μ (N · s/m^2)	Kinematic Viscosity, ν (m^2/s)
0	1.29	1.72E-05	1.33E-05
5	1.27	1.74E-05	1.37E-05
10	1.25	1.76E-05	1.41E-05
15	1.23	1.79E-05	1.45E-05
20	1.21	1.81E-05	1.50E-05
25	1.19	1.84E-05	1.54E-05
30	1.17	1.86E-05	1.59E-05
35	1.15	1.88E-05	1.64E-05
40	1.13	1.91E-05	1.69E-05
45	1.11	1.93E-05	1.74E-05
50	1.09	1.95E-05	1.79E-05
55	1.08	1.98E-05	1.83E-05
60	1.06	2.00E-05	1.89E-05
65	1.04	2.02E-05	1.94E-05
70	1.03	2.04E-05	1.98E-05
75	1.01	2.06E-05	2.04E-05
80	1.00	2.09E-05	2.09E-05